Optional Temperature Controls

Bimetallic monocontact thermo-switch series TM4/A1

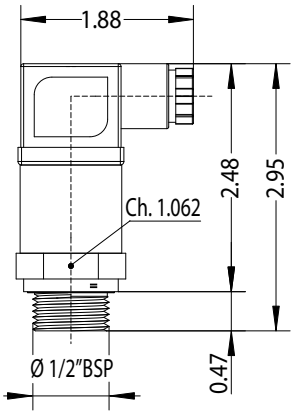

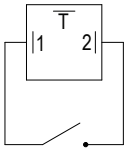

TM4/A1 Series temperature switches are normally open.
They close on rise when the fluid temperature:
exceeds the higher set point (turning the fan on).
They re-open at the lower set point (Turning the fan off).
The 22° F hysteresis prevents the fan from over-cycling.
The top of the switch may be rotated in 90° increments for ease of wiring.

Technical Data

Working temperature : from -68°F to 248°F
Commutation frequency : 20 cycles/min
Switching accuracy : +/-7°F
Fixed hysteresis value : about 22°F
Body material : brass
Thread connection : ½ BSPP (seal included)
Max pressure : 2900 PSI
Mounting : in any position
Weight : 2.5 oz.

Part Number	Temperature Range	Model Code Feature Adder
TM 44 / A1	104 - 82°F	- 1
TM 45 / A1	122 - 100°F	- 2
TM 46 / A1	140 - 118°F	- 3
TM 47 / A1	158 - 136°F	- 4
TM 48 / A1	176 - 154°F	- 5
TM 49 / A1	194 - 172°F	- 6

Normally closed switches are available: Consult factory.

Electrical Data

Electrical connections : DIN 43650
Electrical protection : DIN 40050 IP65
Maximum contact load 230V -10A & DC12V - 10A & DC24V - 5A
Normally closed switches are available: Consult factory

Optional Temperature Controls

Adjustable Thermostat TC2

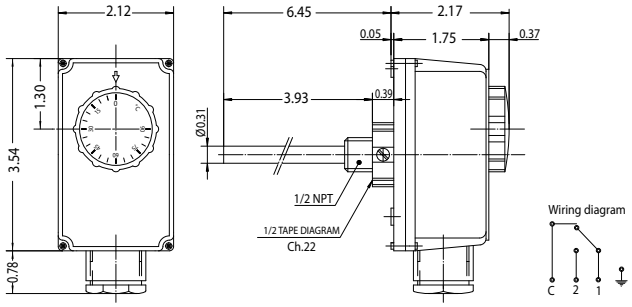

Part Number	Temperature range	Model Code Feature Adder
TC2 L100	0 - 194°F	- 8

Unipolar, liquid filled, encased, switch contacts,immersion thermostat, bulbwell included.

Technical Data

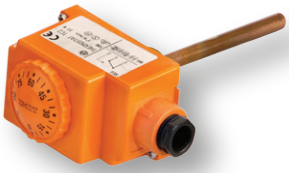

Differential: ΔT 5.4°F;
Contacts: Ag 1000/1000;
Maximum contact load 230V: 10A
Switch of cutoff contacts loading;
Fairlead: PG9;
Max. head temperature: 176°F
Max. sensing bulb temperature: 266°F
Temperature rate of change: 1 K/min
Degree of protection: IP 40
Number of automatic cycles: II (100.000)

Adjustable Thermostat TC2 L= 39 inch

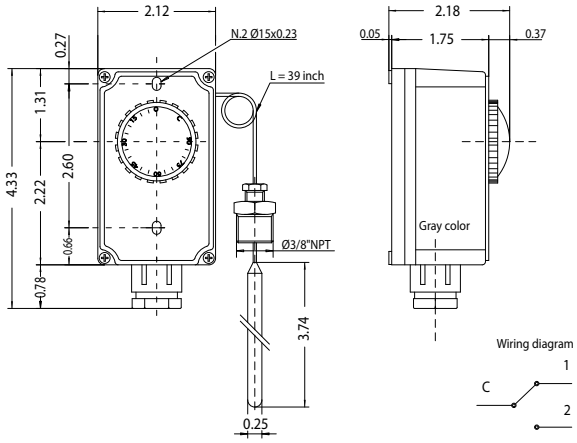

Part Number	Temperature range	Model Code Feature Adder
TC2 L39	0 - 194°F	- 9

Technical Data

Temperature range: 0 - 194°F
Differential: *ΔT 5.4°F;*
Contacts rating: 10(2.5)A/230V
Fairlead: M20x1.5 mm;
Max. head temperature: 176°F
Max. sensing bulb temperature: 302°F
Temperature rate of change: 1 K/min
Degree of protection: IP 40
Silver contacts

HEAT-EXCHANGERS